0030631000, # 0030651000
0030661000, # 0030671000
0030711000, # 0030721000
0030731000, # 0030741000
0030751000, # 0031311000

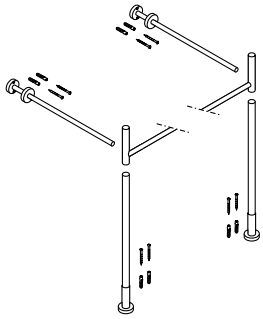

1

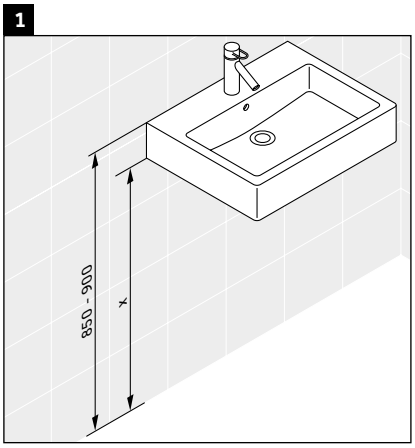

2

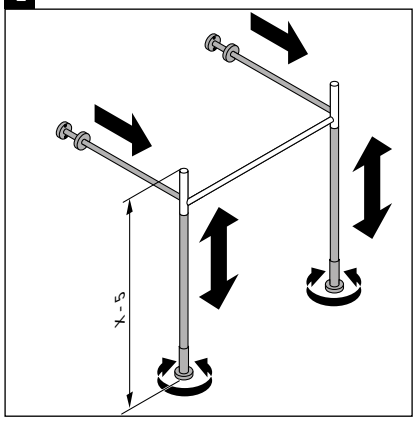

3

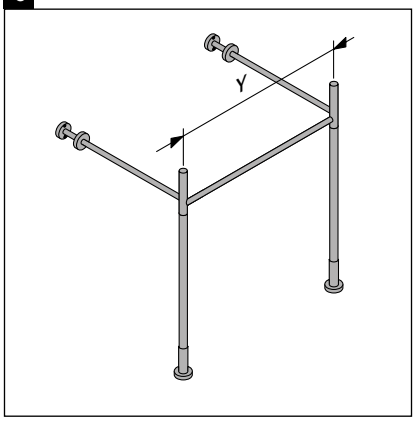

4

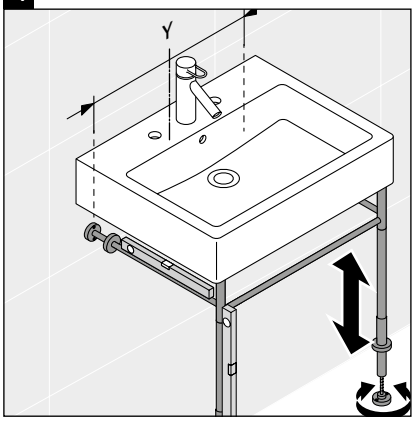

5

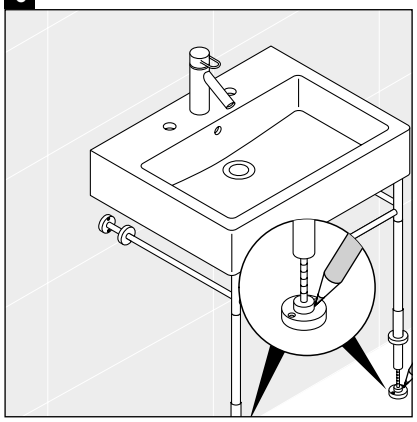

6

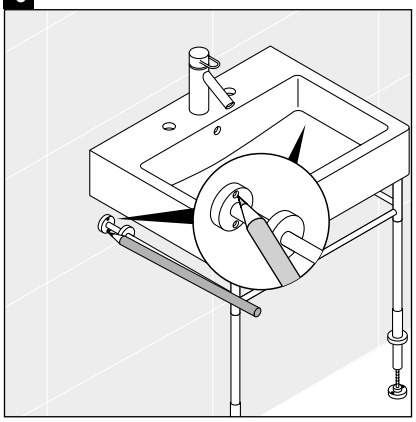

7

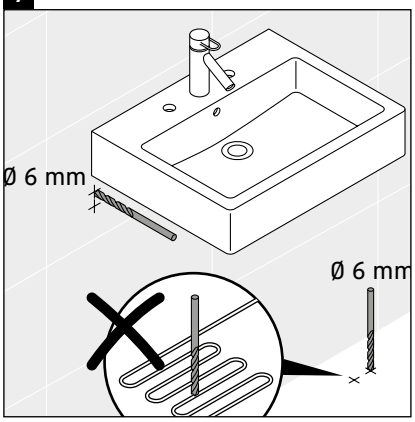

8

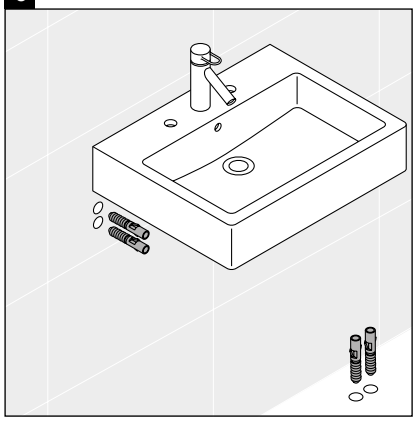

9

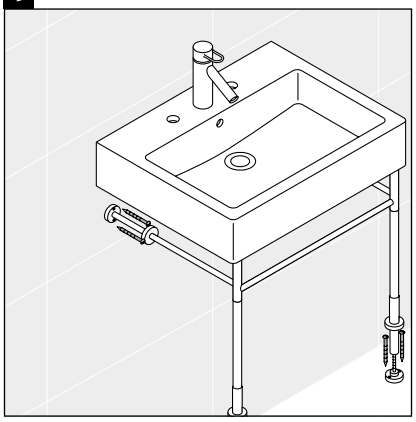

10

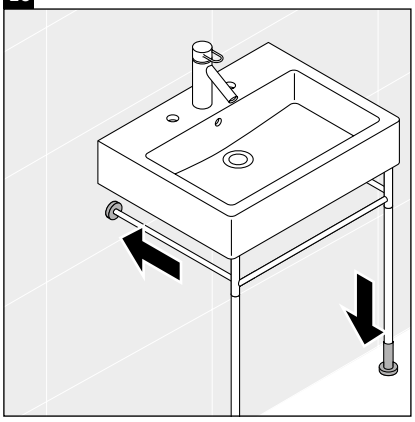

DURAVIT AG, Werderstr. 36, 78132 Hornberg, Germany, Phone +49 78 33 700, Fax +49 78 33 70 289, info@duravit.de, www.duravit.de

Best.-Nr. 53692/20.08.5 We reserve the right to make technical improvements and enhance the appearance of the products shown.